COMPODIS

# PRODUCT DATA SHEET

| SUB-MINIATURE WEDGE BASE LAMP | L286 |
|---|---|

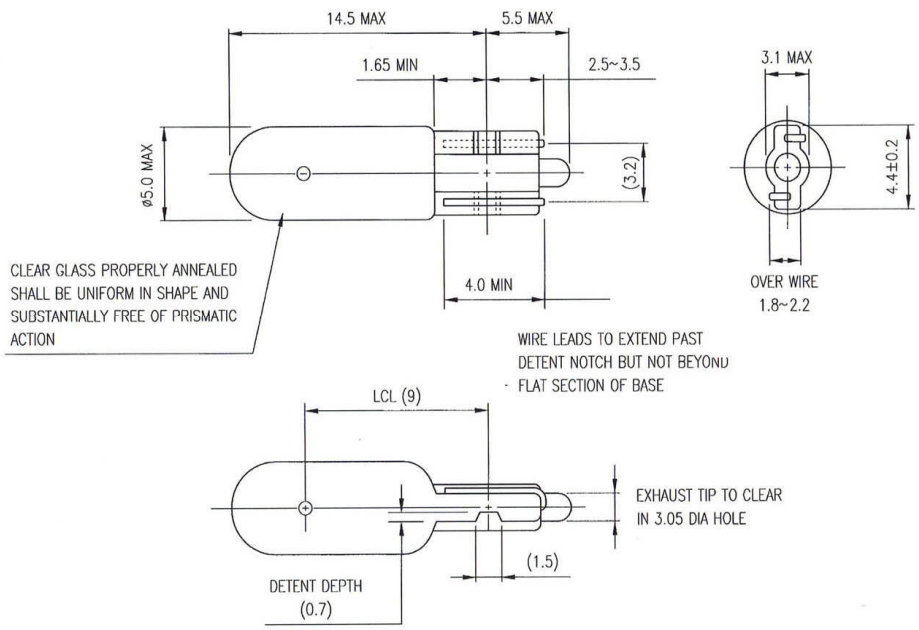


| | | | | |
|---|---|---|---|---|
| RATING: | 12V 1.2WL | | | |
| VOLTAGE: | V | 13.5V | | |
| CURRENT: | mA | Nom. | Min. | Max. |
| | | 95 | 86 | 104 |
| LIGHT OUTPUT: | mscp | 0.557 | 0.445 | 0.636 |
| | Lm | 7.0 | 5.6 | 8.0 |
| LIFE: (@13.5V) | Hours | 6,000 | | |
| FIL. SHAPE: | C-2V | | | |

1) W2x4.6d wedge base to IEC61-1, sheet 7004-94-2, lead-wires with nickel-plated finish.
2) Marking ~ bulb to be durably ink-stamped “CD 12V 1.2WL”
3) RoHS compliant.